RUGBY MANUFACTURING CO.
INDUSTRIAL PARK
515 1st STREET NE
RUGBY, NORTH DAKOTA 58368

03 5753

LR-416, LR-165, LR-25 INSTALLATION AND OPERATION MANUAL

To Be Filled In By Installer

Hoist Installed: _____

Hoist Serial #: _____

Pump Installation and Operation Manual #: _____

In Service Date: _____

Dealer: _____

Address: _____

_____

Dealer Phone Number: _____

Use this manual *ONLY* if installing or operating an LR-416, LR-165, or LR-25 hoist. This manual should be kept in truck glove compartment for reference when needed.

Features LR-416 P/N 03 3021, LR-165 P/N 03 3018, LR-25 P/N 03 3019

FIRST EDITION: July 1, 1997
LATEST EDITION: M (November 11, 2005)

The following step-by-step instructions are to be followed as a general guideline when installing the LR-416, LR-165, or LR-25 hoist assembly.

IMPORTANT FACTS ABOUT THIS MANUAL

This manual **does not** cover the installation and operation of the body prop or body props. The installation and operation of the body prop is covered in manual No. 03 6034. Every LR-416, LR-165, and LR-25 application sold by Rugby Manufacturing Co. includes manual No. 03 6034 Body Prop Manual.

Also, this manual **does not** cover the installation and operation of the hydraulic system. There are four different hydraulic systems available for some or all of the hoist models (LR-416, LR-165, or LR-25).

The four types of hydraulic systems and their respective installation and operation manuals are listed below:

Installation & Operation Manual Part Number	*Type of Hydraulic System*
03 5750	Drive Shaft Driven Pump w/ Mid-Latch Control Cable
03 6028	Split "M" (Direct Mount Pump w/ Remote 9 Quart Reservoir) & Tower Control
03 5771	Electric Single Acting Pump w/ Push Button Control
03 5772	Electric Double Acting Pump w/ Push Button Control

Depending on the type of hydraulic system purchased, one of the above manuals will be included in every LR-416, LR-165,or LR-25 sold by Rugby Manufacturing Co. Before installing the hoist, be sure you have the proper manuals to do the job. If you do not have the correct manuals, contact Rugby Manufacturing Co.

"CAUTION"

The hydraulic system supplied with a given hoist manufactured by Rugby Manufacturing Co. is made up of components (pump, valves, reservoir, hoses, cylinder, etc.) that are designed to be compatible with each other.

If you substitute hydraulic components, it is your responsibility to **BE SURE** they are compatible with the other components supplied by Rugby Manufacturing Co. Incompatible hydraulic components may cause failure of the hoist which in turn could damage the truck, damage other property, and cause human injury or death.

All Rugby Manufacturing Company's liability and warranty for a given hoist will be voided if it is determined by Rugby Manufacturing Co. that substituted hydraulic components were used that were incompatible with those supplied by Rugby Manufacturing Co.

Several hoist hydraulic parameters are given in the following table, these parameters are given as a general guide. To ensure component compatibility, consult Rugby Manufacturing Co.

HOIST MODEL	**LR-416**	**LR-165**	**LR-25**
"**MAXIMUM**" HYDRAULIC FLOW RATE (GPM)	4 GPM	6 GPM	6GPM
"**MAXIMUM**" PRESSURE FOR RAISING PORTION OF DUMP CYCLE (PSI)	3200 PSI	3200 PSI	3200 PSI
"**MAXIMUM**" PRESSURE FOR LOWERING PORTION OF DUMP CYCLE (PSI)	1500 PSI	1500 PSI	1000 PSI

WARNINGS:

Warning: Not installing or operating equipment correctly can cause component damage or an accident which may cause injury or death. "**Always**" install and operate equipment in accordance with manufacturer's instructions. Read and understand this manual fully before proceeding.

Warning: Welding, oxy-fuel cutting, or grinding sparks can cause fuel to ignite which in turn can lead to injury or death. "**Always**" take adequate steps to avoid ignition of fuel from fuel tanks when welding, grinding, or oxy-fuel cutting during equipment installation.

Warning: Heat from the truck's exhaust system can cause hydraulic component failure and may lead to a fire which could cause injury or death. "**Always**" install equipment in locations where heat from the exhaust system will not damage any hydraulic component.

Warning: Being under a raised body can result in serious injury or death should the body inadvertently descend. "**Never**" position yourself or allow others to position themselves under a "**loaded**" body. "**Always**" prop the "**unloaded**" body up using the body prop or body props supplied. "**Remember**" body props are to be used only on an "**unloaded**" body.

Warning: Malfunctioning equipment can cause property damage, injury or death. "**Always**" have faulty equipment repaired before continuing its use. If required, consult the manufacturer.

Warning: Overloading of a truck can cause truck component damage or an accident which may cause injury or death. "**Never**" exceed the gross vehicle weight (GVW) or the gross axle weight (GAW) rating of your vehicle.

Warning: The inadvertent shorting of the truck's electrical supply can cause a fire or equipment damage that could lead to injury or death. "**Always**" disconnect the vehicle battery prior to installing, servicing or repairing the pump.

Warning: Never install a cable on a truck while the body is raised without first blocking, bracing, or propping the body up to prevent the body from inadvertently falling when the control valve lever is moved. A falling body will result in serious injury or death if the control valve lever is moved while someone is under the non-supported body.

Warning: Damage to brake lines during equipment installation, or installing bolts or equipment in such a way that the line will rub and become damaged can lead to brake failure which can cause an accident and can lead to severe injury or death. **"Always"** take adequate steps to prevent brake line damage during installation and isolate brake lines from installed equipment.

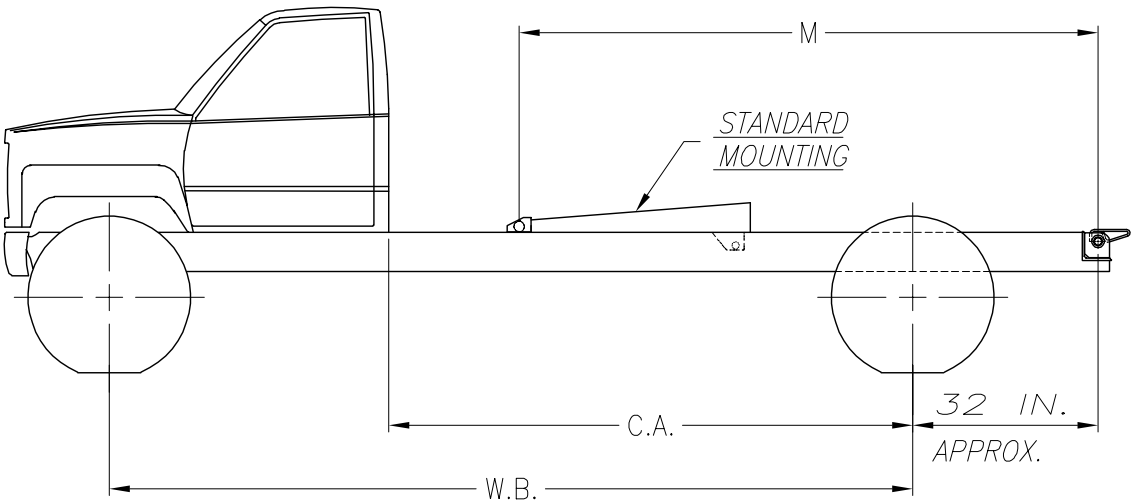

MODEL: LR-416
DUMP CLASS: 10
CONVERSION CLASS: B

LR-416
TABLE A
FIGURE 1

STANDARD MOUNTING	
DUMP ANGLE	M
40°	91 IN.
45°	82 IN.
50°	74 IN.

LR-416 CONVERSION APPLICATION

BODY LENGTH	CA	REAR OVERHANG	CAPACITY 40° DUMP	CAPACITY 45° DUMP	CAPACITY 50° DUMP
9'	60"	18"	8.5 TON	7.6 TON	6.9 TON
9'	72"	6"	6.3 TON	5.7 TON	5.1 TON
10'	60"	30"	10.2 TON	9.2 TON	8.2 TON
10'	72"	18"	7.3 TON	6.5 TON	5.9 TON
12'	72"	42"	10.2 TON	9.2 TON	8.2 TON
12'	84"	30"	7.3 TON	6.5 TON	5.9 TON

LR-416 DUMP APPLICATION

BODY LENGTH	OVERHANG	CAPACITY 50° DUMP ANGLE
8'	12"	6.9 TON
9'	12"	5.9 TON
10'	12"	5.1 TON

ABOUT RUGBY® HOISTS

Capacities are based on water level, non-diminishing loads. Because of variations in truck equipment and cab axles (CA), the data contained in this sheet is provided only as a general guide.

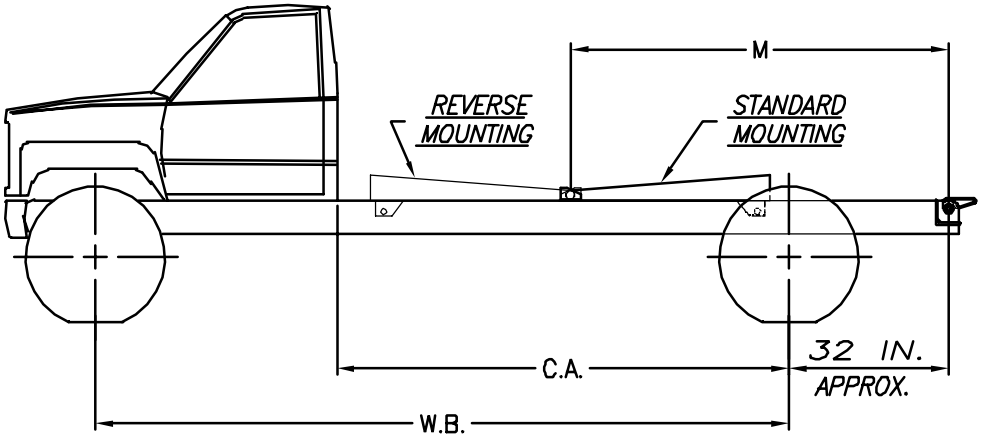

REVERSE MOUNTING	
DUMP ANGLE	M
40°	92 IN.
45°	83 IN.
50°	75 IN.

LR-165
TABLE A
FIGURE 1

STANDARD MOUNTING	
DUMP ANGLE	M
40°	94 IN.
45°	85 IN.
50°	77 IN.

MODEL: LR-165
DUMP CLASS: 20
CONVERSION CLASS: C

LR-165 CONVERSION APPLICATION

BODY LENGTH	CA	REAR OVERHANG	CAPACITY 40° DUMP	CAPACITY 45° DUMP	CAPACITY 50° DUMP
9'	60"	18"	12.7 TON	11.6 TON	10.5 TON
9'	72"	6"	9.5 TON	8.7 TON	7.9 TON
10'	60"	30"	15.3 TON	13.9 TON	12.6 TON
10'	72"	18"	10.9 TON	9.9 TON	9.0 TON
12'	72"	42"	15.3 TON	13.9 TON	12.6 TON
12'	84"	30"	10.9 TON	9.9 TON	9.0 TON

LR-165 DUMP APPLICATION

BODY LENGTH	OVERHANG	CAPACITY 50° DUMP ANGLE
8'	12"	10.5 TON
9'	12"	9.0 TON
10'	12"	7.9 TON

ABOUT RUGBY® HOISTS

Capacities are based on water level, non-diminishing loads. Because of variations in truck equipment and cab axles (CA), the data contained in this sheet is provided only as a general guide.

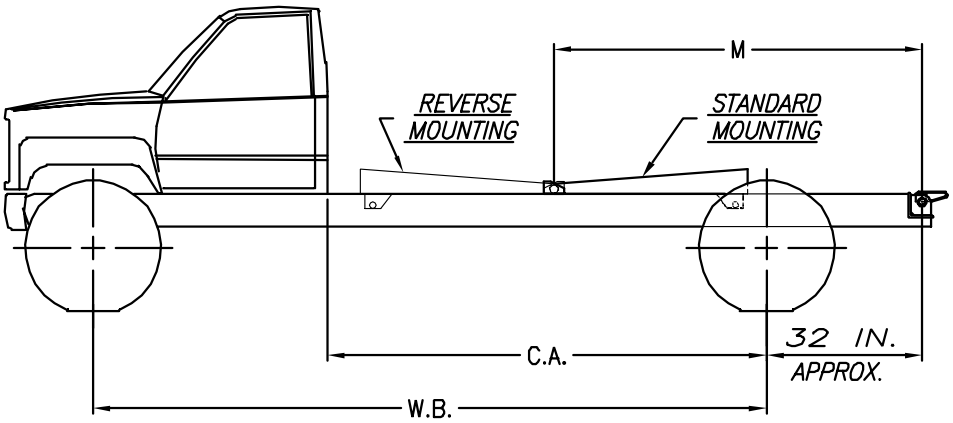

REVERSE MOUNTING	
DUMP ANGLE	M
40°	107 IN.
45°	96 IN.
50°	87 IN.

LR-25
TABLE A
FIGURE 1

STANDARD MOUNTING	
DUMP ANGLE	M
40°	110 IN.
45°	99 IN.
50°	90 IN.

MODEL: LR-25
DUMP CLASS: 40
CONVERSION CLASS: D

LR-25 CONVERSION APPLICATION

BODY LENGTH	CA	REAR OVERHANG	CAPACITY 40° DUMP	CAPACITY 45° DUMP	CAPACITY 50° DUMP
12'	84"	30"	14.7 TON	13.2 TON	12.1 TON
13'	84"	42"	17.1 TON	15.5 TON	14.1 TON
13'	102"	24"	11.4 TON	10.3 TON	9.4 TON
14'	102"	36"	12.8 TON	11.6 TON	10.6 TON
14'	108"	30"	11.4 TON	10.3 TON	9.4 TON
15'	102"	48"	14.7 TON	13.2 TON	12.1 TON
15'	108"	42"	12.8 TON	11.6 TON	10.6 TON

LR-25 DUMP APPLICATION

BODY LENGTH	OVERHANG	CAPACITY 50° DUMP ANGLE
10'	12"	10.6 TON

ABOUT RUGBY® HOISTS

Capacities are based on water level, non-diminishing loads. Because of variations in truck equipment and cab axles (CA), the data contained in this sheet is provided only as a general guide.

ASSEMBLY INSTRUCTIONS:

1. Mark the location for the rear hinge. This location should be immediately behind a truck cross member, approximately 32" behind the center of the rear axle on single axle trucks. Refer to Figure 1 for the specific hoist model you are installing.

2. Cut a notch in each truck chassis frame rail as illustrated in Figure 2.

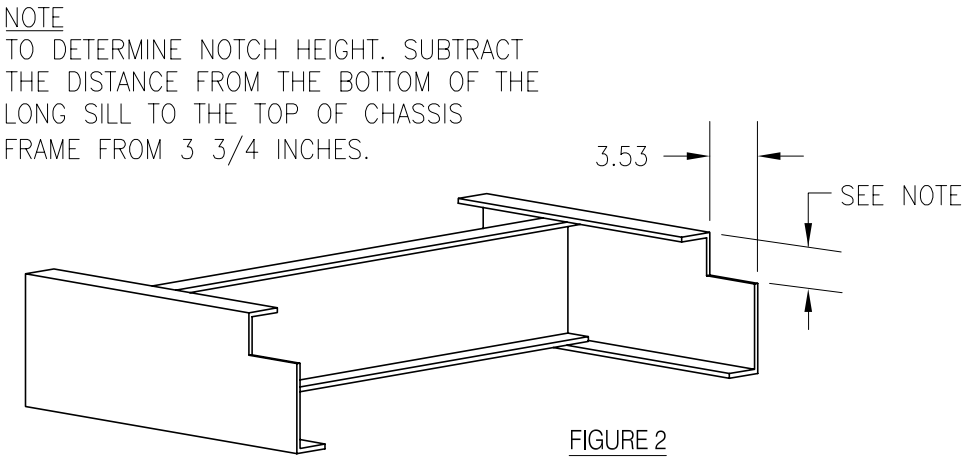

FIGURE 2

3. Position the rear hinge angle in the notch cut in Step 2. The rear hinge angle is 37 3/16" wide and should be centered side to side in the notch as illustrated in Figure 3. Weld the rear hinge angle to each of the truck chassis frame rails.

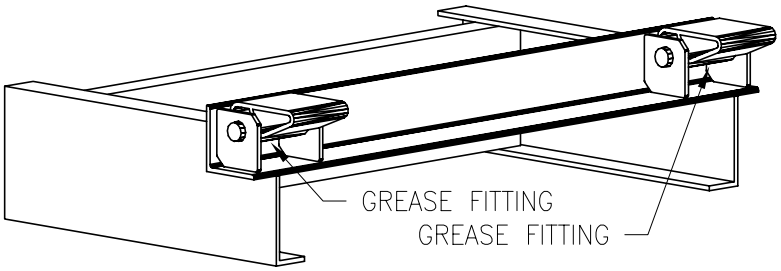

FIGURE 3

NOTE: This hinge assembly is designed for a truck longsill spacing of 34" and is not recommended for any other width.

4. Locate the hoist on the truck frame making sure to center the hoist right and left and to square the hoist with the truck frame. The LR-416, LR-165, and LR-25 are designed to rest on the truck frame as shown in their respective Figure 1. A portion of the hoist extends below the truck frame level; therefore, the hoist may be moved slightly forward to avoid truck cross members. The distance between the rear hinge center and saddle center (Figure 1) is referred to as the "M" dimension. In Table A, the "M" dump angles are tabulated.

NOTE: Moving the hoist along the truck frame will affect the hoist's performance. A forward movement will reduce the dump angle and increase capacity, while a rearward movement will increase dump angle and decrease capacity.

5. Slide a lock collar onto each lifting shaft. Slide a lifting shaft with collar into each end of the hoist lifting tube (Figure 4).

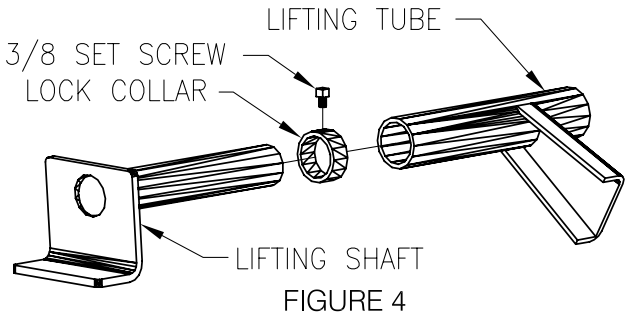

FIGURE 4

6. Position a mounting angle under each hoist saddle. Secure each mounting angle to the truck frame by drilling two 17/32" dia. holes and bolting the large mounting angle to the truck frame. Finally, weld each mounting angle to its respective hoist saddle. See Figure 5.

NOTE: **DO NOT** weld mounting angles or saddle flats to the truck frame.

NOTE: All fasteners used in the above steps are 1/2" x 1 1/2" hex cap screws, lock washers, and nuts. Torque all 1/2" fasteners to 90 ft. lb.

NOTE: The hoist saddle must set directly on the truck frame. If rivet interference is encountered, counter-sink the rivet heads into the hoist saddle.

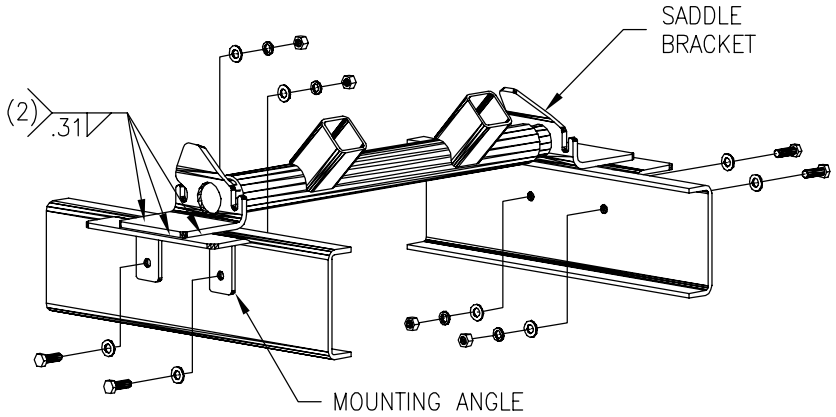

FIGURE 5

7. Install the hydraulic system using the Pump Installation & Operation Manual for the type of pump being installed.

NOTE: A listing of the Pump Installation & Operation Manuals is given on page #1 of this manual.

8. Position and secure the liner (sleeper) to the truck frame. The LR-416 or LR-165 hoist requires at least 5 3/4" of clearance above the truck frame. As an example, if 4" long beams are on the truck body, a liner of at least 1 3/4" will be required to gain enough room, 5 3/4", for mounting the LR-416 or LR-165. Similarly, an LR-25 requires 7 1/2" of clearance.

9. Position the body with the long beams (just long beams if they are separate from body) onto the truck frame.

NOTE: A clearance of at least 2" is required between the truck cab and the closest point on the truck body.

10. Position the rear hinge brackets against the long beams. Once in position, weld the rear hinge brackets to the body long beams as shown in Figure 6.

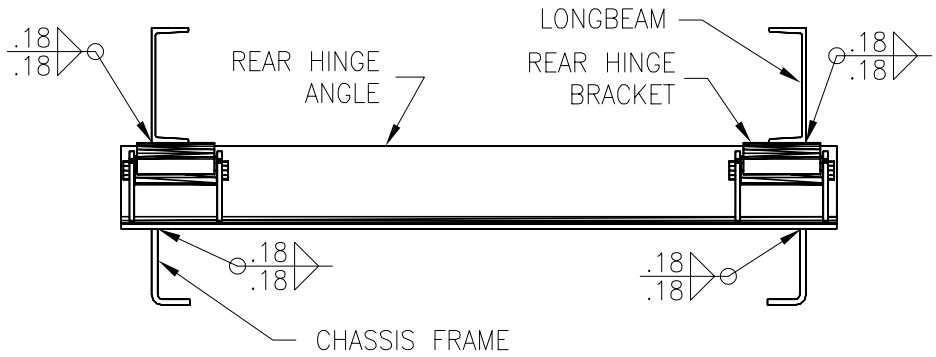

FIGURE 6

11. Slide each of the lifting shafts against the inside of the channel long beam. Weld the lifting shaft to secure the shaft to the long beam as shown in Figure 7. With the shaft secured, slide the lock collars against the hoist lifting tube and lock them by tightening the 3/8" set screw (refer to Figures 4 and 7). Torque each set screw to 24 ft./lb.

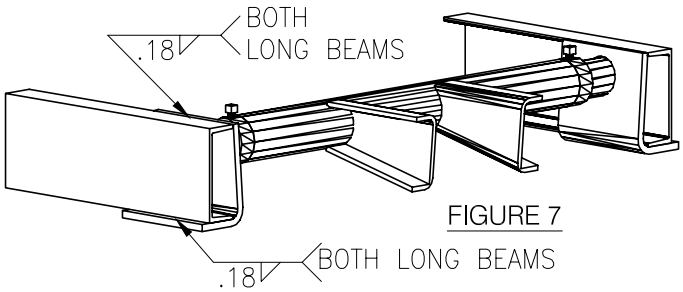

FIGURE 7

12. Install all grease fittings. For grease fitting locations, refer to Figures 8, 9 or 10 on page 10. Torque each grease fitting to 70 in./lb. Lubricate all grease fittings upon installation.

IMPORTANT: Hoist should be greased periodically or every time truck is greased.

13. With the hoist and body completely installed, cycle the hoist several times to rid the hydraulic circuit of air.

14. Referring to Body Prop Manual #03 6034, install body prop.

WARNING: Installing or operating this hoist without first understanding the proper installation and operation procedures can lead to serious injury or death. Always read and understand fully all installation and operation manuals before installing or operating this equipment.

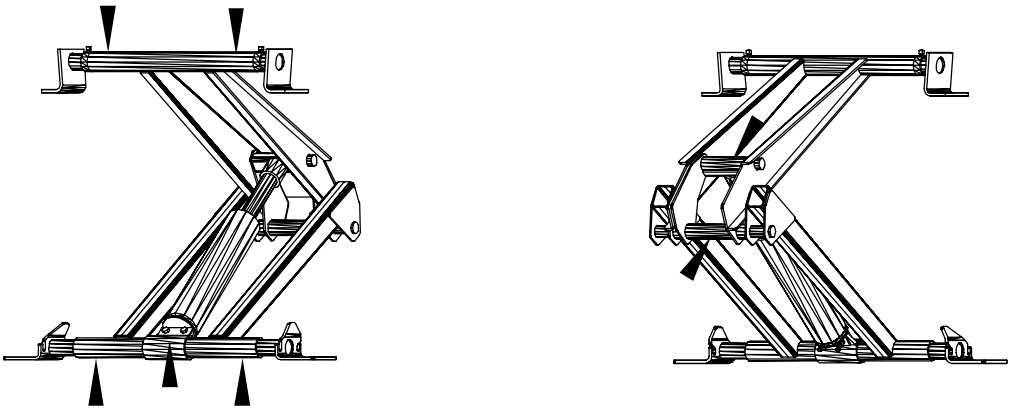

FIGURE 8 - GREASE ZERK LOCATIONS LR-416

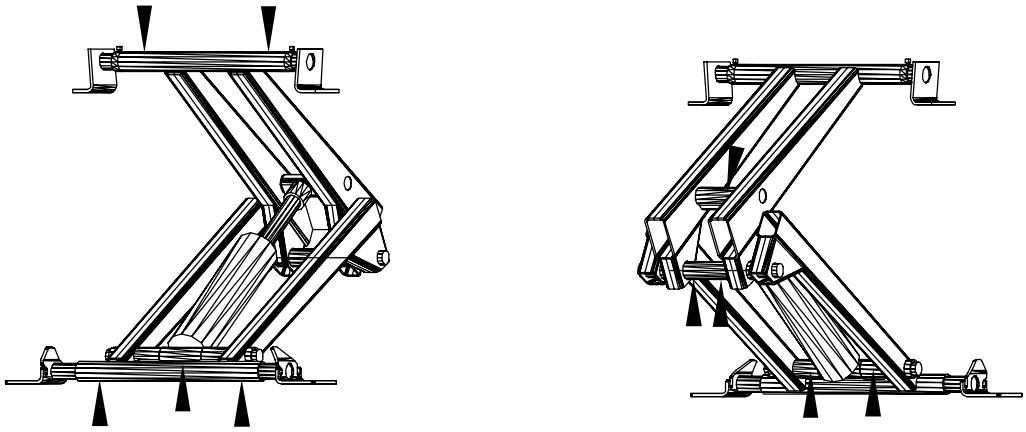

FIGURE 9 - GREASE ZERK LOCATIONS LR-165

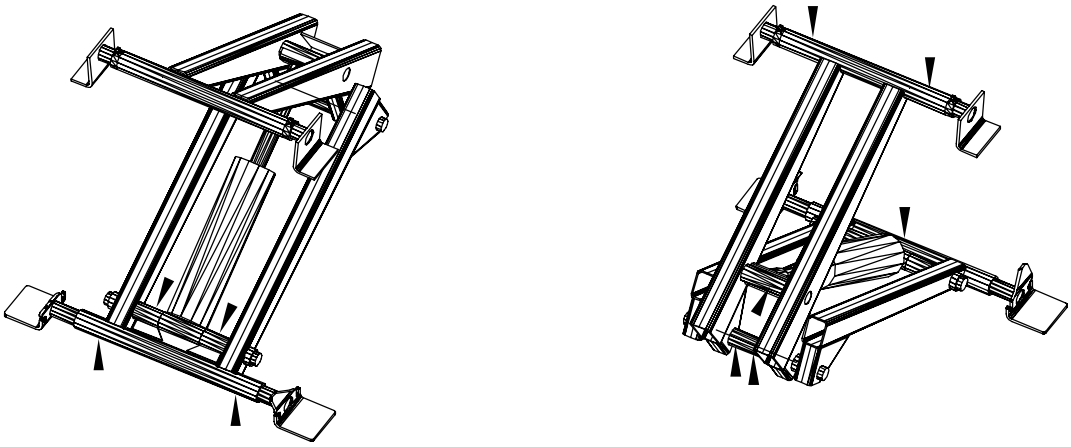

FIGURE 10 - GREASE ZERK LOCATIONS LR-25

DECAL LOCATION:

Two 03 6039 "Danger" decals, as shown on this page, are supplied with each LR-416, LR-165, and LR-25. These decals must be positioned as shown in Figure 11.

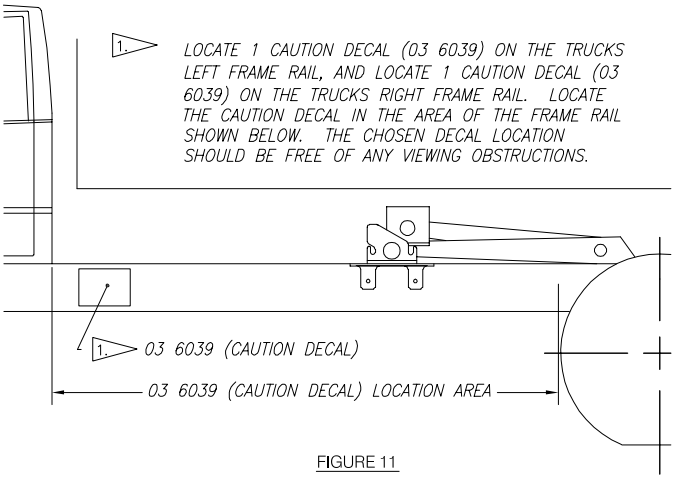

FIGURE 11

WARNING: Missing or damaged decals can lead to accidents which may cause serious injury or death. If any decals are missing or damaged, they must be replaced.

To obtain replacement decals, contact your "Rugby" dealer or contact:

Rugby Manufacturing Co.
Industrial Park
515 1st Street NE
Rugby, ND 58368

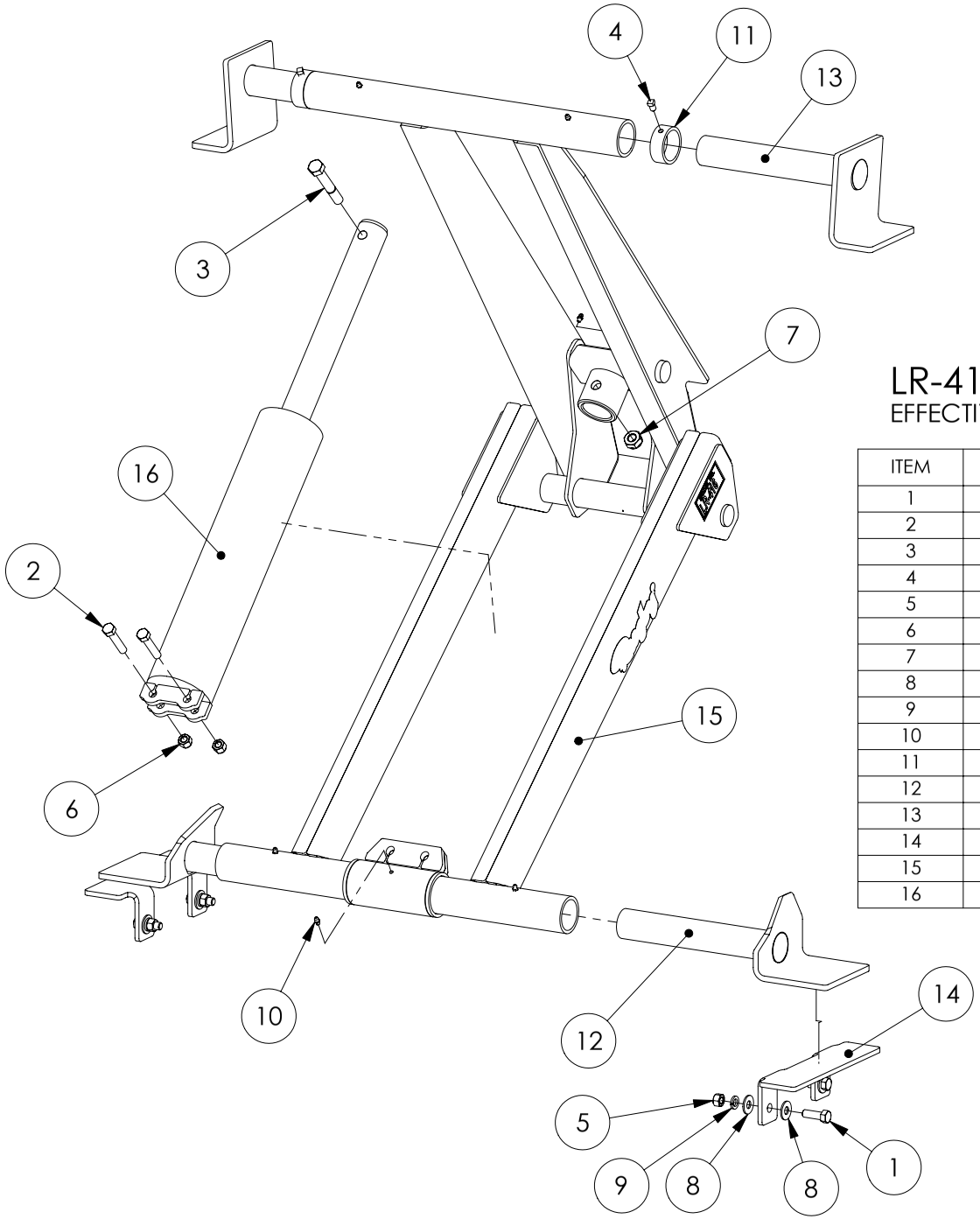

LR-416 PARTS LIST

EFFECTIVE 11/11/2005

ITEM	PART #	DESCRIPTION	QTY
1	00 7347	HHC SCREW, 1/2-13 X 1.5, GR. 5, PLT	4
2	00 7354	HHC SCREW, 1/2-13 X 2.5, GR. 8, PLT	2
3	00 7392	HHC SCREW, 5/8-11 X 4, GR. 8, PLT	1
4	00 7452	SET SCREW, 3/8-16 X 0.5 SQR HD, PLN	2
5	00 7662	NUT, 1/2-13 HEX, GR5 STL, PLT	4
6	00 7666	NUT, 1/2-13 NYLOCK - NE, GR. 8 STL	2
7	00 7669	NUT, 5/8-11 NYLOCK - NE, GR. 5 STL	1
8	00 7741	WASHER, SAE 1/2 FLAT, PLATED	8
9	00 7744	WASHER, 1/2 LOCK, PLATED	4
10	00 8215	FITTING, GREASE, THREAD FORMING	7
11	03 0668	LOCK COLLAR	2
12	03 1782	SADDLE BRKT ASSY, SET, 416/165/25	2
13	03 1795	LIFT ANGLE SA, LR-416/165/25	2
14	03 2010	ANGLE BRACKET, MOUNTING	2
15	032676	FRAME WELDMENT, LR-416	1
16	10 0547	CYLINDER ASSY, LR-416	1

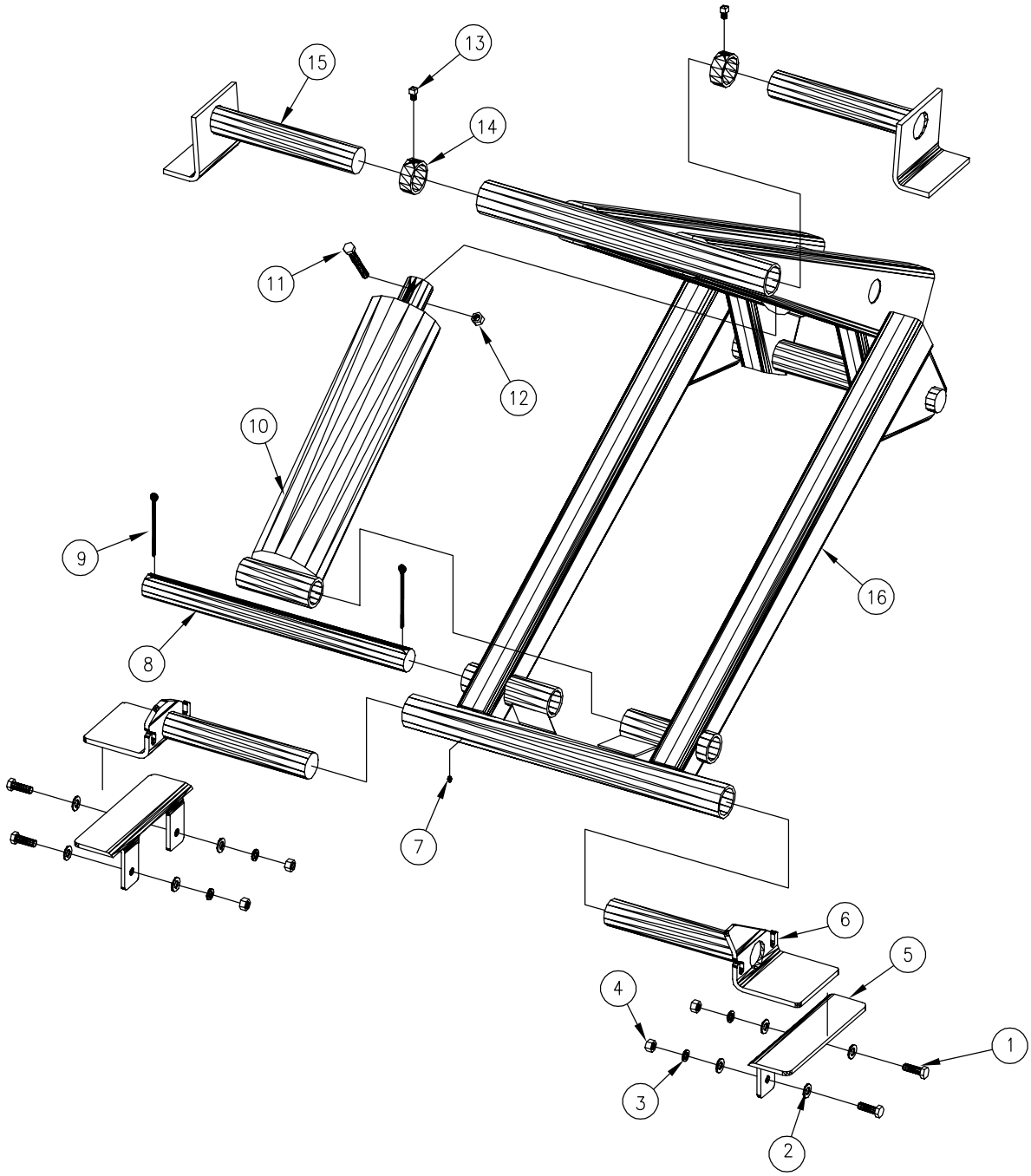

LR-165 HOIST FRAME

8	03 0884	CYLINDER PINNING SHAFT	1	16	03 0694	LR-165 HOIST FRAME	1
7	00 8215	THREAD FORMING GREASE FITTING	10	15	03 1795	LIFT ANGLE	2
6	03 1782	SADDLE BRACKET SET	1	14	03 0668	LOCK RING	2
5	03 2010	MOUNTING ANGLE	2	13	00 7452	3/8 SET SCREW	2
4	00 7662	1/2 HEX NUT	4	12	00 7669	5/8 HEX NUT/NYLON/LOCK	1
3	00 7744	1/2 LOCK WASHER	4	11	00 7392	5/8 x 4 HEX CAP SCR. Gr. 8	1
2	00 7741	1/2 FLAT WASHER	8	10	03 2542	5 x 16 CYLINDER	1
1	00 7347	1/2 x 1 1/2 HEX CAP SCREW	4	9	00 7959	5/16 x 3 1/2 COTTER PIN	2
ITEM	PART NUMBER	DESCRIPTION	REQ'D	ITEM	PART NUMBER	DESCRIPTION	REQ'D

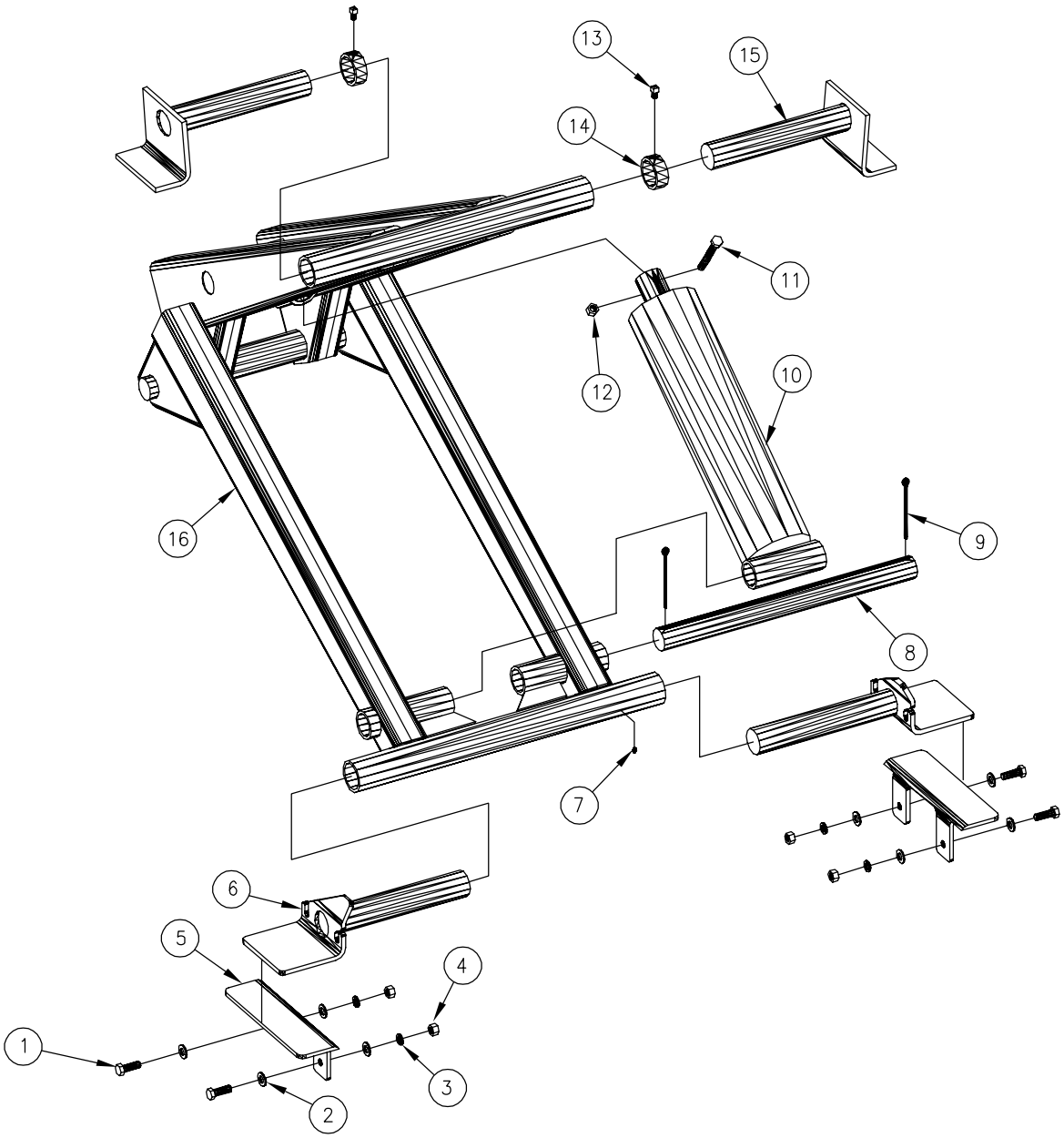

LR-25 HOIST FRAME

8	03 0884	CYLINDER PINNING SHAFT	1	16	03 0874	LR-25 HOIST FRAME	1
7	00 8215	THREAD FORMING GREASE FITTING	10	15	03 1795	LIFT ANGLE	2
6	03 1782	SADDLE BRACKET SET	1	14	03 0668	LOCK RING	2
5	03 2010	MOUNTING ANGLE	2	13	00 7452	3/8 SET SCREW	2
4	00 7662	1/2 HEX NUT	4	12	00 7669	5/8 HEX NUT/NYLON/LOCK	1
3	00 7744	1/2 LOCK WASHER	4	11	00 7392	5/8 x 4 HEX CAP SCR. Gr. 8	1
2	00 7741	1/2 FLAT WASHER	8	10	03 2542	5 x 16 CYLINDER	1
1	00 7347	1/2 x 1 1/2 HEX CAP SCREW	4	9	00 7959	5/16 x 3 1/2 COTTER PIN	2
ITEM	PART NUMBER	DESCRIPTION	REQ'D	ITEM	PART NUMBER	DESCRIPTION	REQ'D

© 1997,1998, 2000, 2001, 2002, 2003, 2005 Rugby Manufacturing Co.