INSTALLATION AND OPERATION MANUAL
SR-SERIES HOIST
1841488

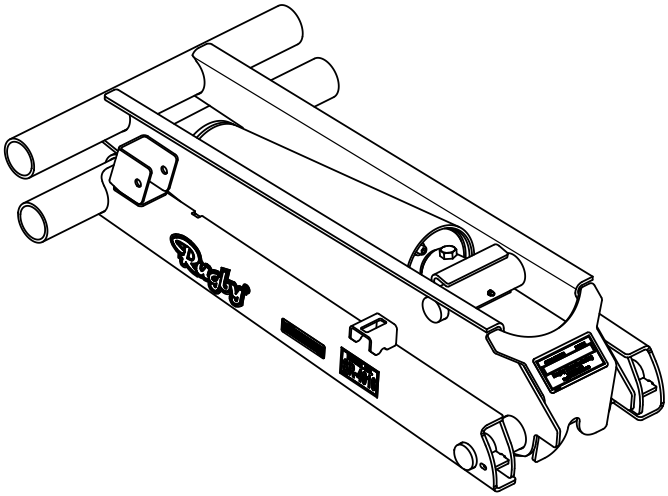

Serial Number: _____

In-Service Date: _____

Read this manual thoroughly prior to installation and operation. This manual outlines the installation and operation of an SR Series Hoist & Sub-frame manufactured by Rugby Manufacturing Co. This manual should be kept readily accessible for any potential operator at all times. Contact your dealer or a Rugby Manufacturing customer service representative at 800-869-9162 or www.rugbymfg.com with any questions or concerns.

Table of Contents

Section 1: Safety

This manual provides guidelines and instructions for correctly operating and maintaining your Rugby Manufacturing Co. product. Any and all people that own and operate a Rugby Manufacturing dump trailer are recommended to read and fully understand each section in this manual.

Throughout this manual, the three following types of labels will be used: Danger, Warning, and Caution. For the safety of the operator, it is imperative that all labels are obeyed.

⚠ DANGER
Indicates imminent danger. Failure to follow this instruction will result in death or serious injury.

⚠ WARNING
Indicates a possibly impending danger. Failure to follow this instruction can result in death or serious injury.

⚠ CAUTION
Indicates a hazardous situation or unsafe practice which, if not avoided, could result in injury or component damage.

In all cases, Rugby products are sold with the understanding that the purchaser agrees to thoroughly train all operating and maintenance personnel in the correct and safe installation and operation of hoist equipment and to provide adequate supervision of personnel at all times.

Read the following in its entirety before connecting, operating or repairing equipment. Purchasers and operators also should be familiar with the current version of any applicable OSHA regulations, standards and guidelines.

Should any questions arise concerning safe and proper procedures, contact Rugby Manufacturing Co. to the installation or use at (800) 869-9162 or (701) 776-5722.

The hydraulic system supplied with an SR-Series hoist manufactured by Rugby Manufacturing Co. is made up of components (pump, valves, reservoir, hoses, cylinder, etc.) designed to be compatible with each other. Several different types of pump and hydraulic components are available to power the SR-Series hoists. Refer to the pump and hydraulic component Installation and Operation Manual for more information.

⚠ DANGER

If the hydraulic system used to power the hoist was supplied by TBEI, an operation manual will be included with the hydraulic components. This manual MUST BE available for reference by the operator when needed.

If the hydraulic system used to power the hoist was supplied by a company other than TBEI, an operation manual will be included with the hydraulic components. This manual MUST BE available for reference by the operator when needed.

⚠ DANGER

It is the installer's responsibility to ensure any substituted components are compatible with Rugby Manufacturing Co. components. Incompatible hydraulic components may cause failure of the hoist, which in turn, could damage the vehicle, damage other property, and cause death or injury.

If hydraulic components are substituted, it is the installer's responsibility to be sure they are compatible with the components supplied by Rugby Manufacturing Co. Incompatible hydraulic components may cause failure of the hoist which in turn could damage the truck, damage other property, and cause human injury or death. Rugby Manufacturing Company's liability and warranty for a given hoist will be voided if it is determined by Rugby Manufacturing Co. that substituted hydraulic components were used that were incompatible with those supplied by Rugby Manufacturing Co.

⚠ DANGER

Welding, oxy-fuel cutting, or grinding sparks can cause fuel to ignite which in turn can lead to injury or death. Always take adequate steps to avoid ignition of fuel tanks during equipment installation.

⚠ DANGER

Not installing or operating equipment correctly can cause component damage or an accident which may cause injury or death. ALWAYS install and operate equipment in accordance with manufacturer's instructions. Read and understand this manual fully before proceeding.

⚠ DANGER

Damage to brake lines during equipment installation, or installing bolts or equipment in such a way that the line will rub and become damaged can lead to brake failure which can cause an accident and can lead to severe injury or death. ALWAYS take adequate steps to prevent brake line damage during installation and isolate brake lines from installed equipment.

⚠ DANGER

Malfunctioning equipment can cause property damage, injury or death. ALWAYS have faulty equipment repaired before continuing its use. If required, consult the manufacturer.

⚠ CAUTION

To prevent damage to the truck's electrical system, disconnect the positive battery cable and alternator when arc welding on the truck.

⚠ DANGER

The inadvertent shorting of the truck's electrical supply can cause a fire or equipment damage that could lead to injury or death. ALWAYS disconnect the vehicle battery prior to installing, servicing or repairing the pump.

⚠ DANGER

NEVER install a cable on a truck while the body is raised without first blocking, bracing, or propping the body up to prevent the body from inadvertently falling when the control valve lever is moved. A falling body will result in serious injury or death if the control valve lever is moved while someone is under the non-supported body.

⚠ DANGER

NEVER exceed the gross vehicle weight (GVW) or gross axle weight (GAW) rating of your vehicle. This may result in component damage, injury or death.

⚠ DANGER

Avoid bouncing or jerking of the hoist. This may result in component failure, injury or death.

⚠ DANGER

NEVER raise or drive a raised body against another object. This may result in property damage, injury or death.

⚠ DANGER

NEVER connect the hoist to a hydraulic system with more pressure (psi) or flow (gpm) than is recommended. This may result in component failure, injury or death.

⚠ CAUTION

Unlatch tailgate prior to elevating a loaded dump body as excessive forces on the rear of the dump body may result in component failure.

⚠ DANGER

NEVER operate the hoist until bystanders are free & clear of the hoist and body. This may result in injury or death.

⚠ DANGER

NEVER position yourself or allow others under a raised body as this can result in serious injury or death should the body inadvertently descend. ALWAYS prop up the **unloaded** body using the body props.

⚠ DANGER

Place a complete hoist operation manual in the glove box of the truck that will pull the trailer OR in a place on the trailer that is sheltered from the weather and other elements. This manual MUST BE available for reference by the operator when needed.

Section 2: Introduction

Serial Number

This information is required for any warranty or service inquiries, and should be recorded on the front cover of this manual for easy reference. The serial number is located on the hoist serial number plate. Figure 1.

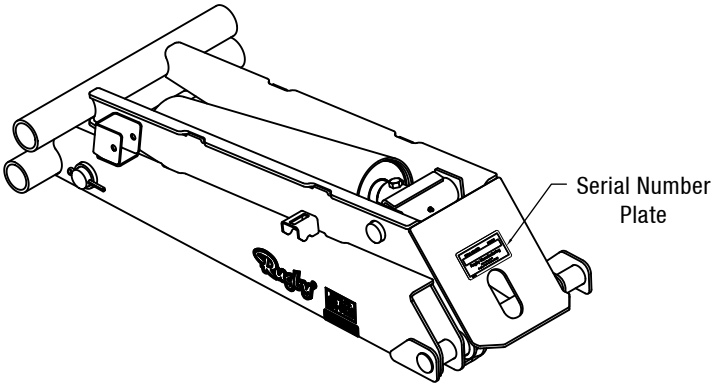

Figure 1: Serial Number Location (SR-5020 Model Shown)

Specifications

Model	Maximum		
	Hydraulic Flow Rate (gpm)	Pressure (PSI)	Down Pressure (PSI)
4016B / 4020	4-6	3200	1000
5020	6-9		

Capacity Charts

The following charts are to be used as a reference when determining capacity based on overhang.

SR-4016B			
Body Length (feet)	**CA (inches)**	**Rear Overhang (inches)**	**Capacity 50º Dump (tons)**
8	60	6	12.1
9	60	6	10.6
9	60	18	14.1
10	84	6	9.4
11	84	6	8.5
11	84	18	10.5
12	84	18	9.4
12	84	30	12.1
12	108	6	7.7
14	108	18	7.7
Mounting Height			9.75”
Minimum Longsill Height			5”
Mounting Distance			71.5”

SR-4020			
Body Length (feet)	**CA (inches)**	**Rear Overhang (inches)**	**Capacity 50º Dump (tons)**
9	60	6	12.8
10	84	6	11.5
11	84	6	10.3
11	84	18	12.8
12	84	18	11.5
12	108	6	9.4
14	108	18	9.4
Mounting Height			10.5”
Minimum Longsill Height			6”
Mounting Distance			84.6”

SR-5020			
Body Length (feet)	**CA (inches)**	**Rear Overhang (inches)**	**Capacity 50º Dump (tons)**
10	84	6	12.9
11	84	18	13.2
11	84	6	10.8
12	84	30	17.0
12	84	18	13.2
12	108	6	10.8
14	108	30	13.2
14	108	18	10.8
14	120	18	10.8
14	120	6	9.1
16	120	42	13.2
16	120	30	10.8
Mounting Height			11.3”
Minimum Longsill Height			7”
Mounting Distance			90.25”

Torque Chart

The following chart is to be used as a guide during installation.

Size	Grade 2 (lb-ft)	Grade 5 (lb-ft)	Grade 8 (lb-ft)
			
1/4-20	3-4	6-7	10-11
1/4-28	4-5	8-9	11-12
5/16-18	8-9	14-15	21-22
5/16-24	9-10	15-16	21-22
3/8-16	17-18	24-26	37-40
3/8-24	19-20	28-30	40-43
1/2-13	38-42	60-65	90-100
1/2-20	43-47	70-75	95-105
5/8-11	75-80	122-130	180-190
5/8-18	85-90	145-150	200-210
3/4-10	132-140	220-230	315-330
3/4-16	152-160	250-260	355-370

Section 3: Installation

Body Prop Installation

⚠ DANGER

NEVER position yourself or allow others under a raised body as this can result in serious injury or death should the body inadvertently descend. ALWAYS prop up the **unloaded** body using the body props.

⚠ DANGER

NEVER use a body prop that is bent or damaged.
A damaged body prop has reduced holding capacity and may break during use. This may result in injury or death. Replace all damaged parts before using equipment.

A body prop and the required hardware is supplied with every SR-series hoist package. For instructions on how to raise and lower the body prop, refer to the Operation section of this manual on page 23.

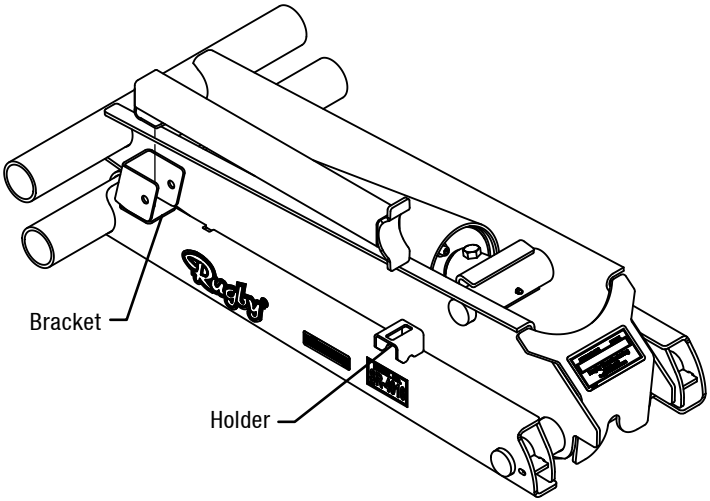

Figure 2: Body Prop Installation Location

1. Insert the body prop into the body prop bracket (Figure 2).
2. Fasten the body prop to the body prop bracket using the supplied hardware.
3. Lower the body prop to the down position and align with slot until the body prop rests against the top of the holder.

Hoist and Sub-frame Assembly

A full breakdown of the hoist and sub-frame components can be found in the Exploded Views section of this manual page 24.

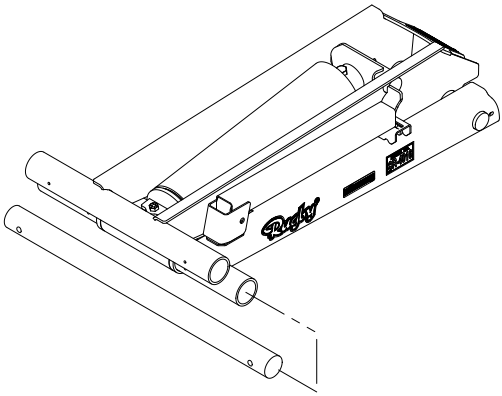

Figure 3: Saddle Tube Location

1. Slide the saddle shaft into the lower tube of the hoist so that approximately 4 inches extend past the tube on each side. (Figure 3)

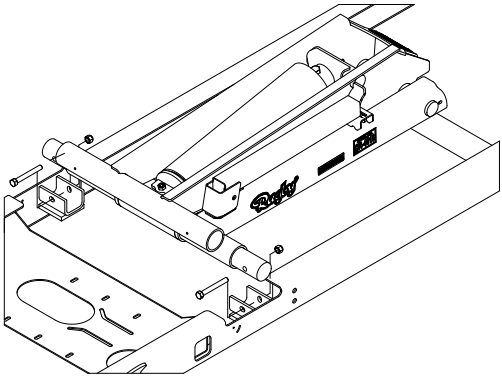

Figure 4: Sub-frame Positioning

2. Position the hoist into the sub-frame by aligning each end of the saddle shaft into the sub-frame brackets. Then secure the saddle shaft to the sub-frame with the provided hardware as shown in Figure 4. Refer to page 11 for torque guidelines.

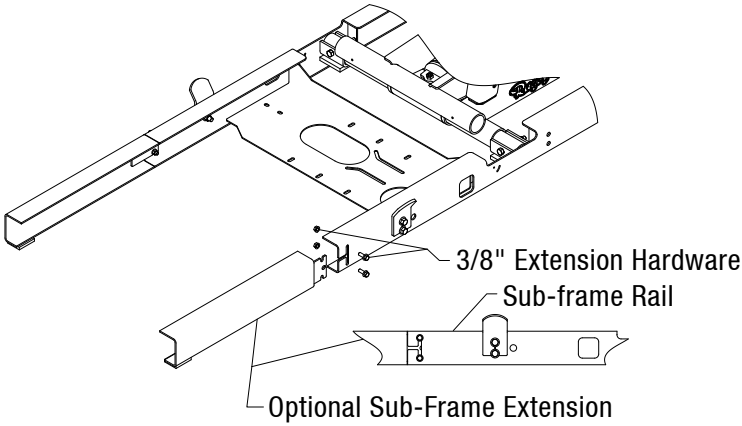

Figure 5: Sub-frame Extension Kit

3. Position the provided 3/8” spacers under each sub-frame rail as far forward as possible. Secure to rail by welding as shown in Figure 5. **NOTE:** Optional 12” or 24” bolt-on sub-frame extensions can be installed to convert the 9’ sub-frame to a 10’ or 11’ as required.

Hoist and Sub-frame Installation

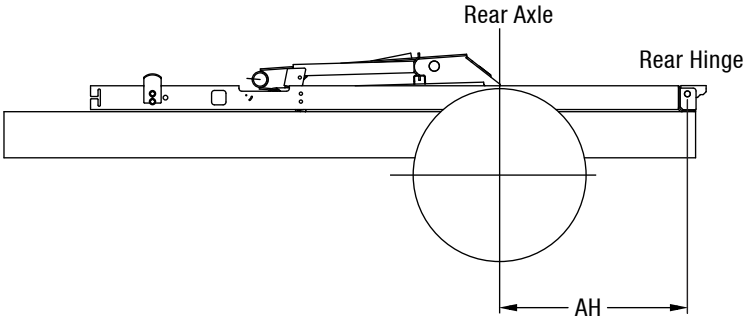

Axle to Rear Hinge (AH)*	Application
34”	Standard
46”	Ford (with rear fuel tank)
49”	Chevrolet and Dodge (with rear fuel tank)

* Approximate dimensions

Figure 6: Hoist Position

1. Position the assembled hoist and sub-frame onto the truck frame using the application chart shown in Figure 6.

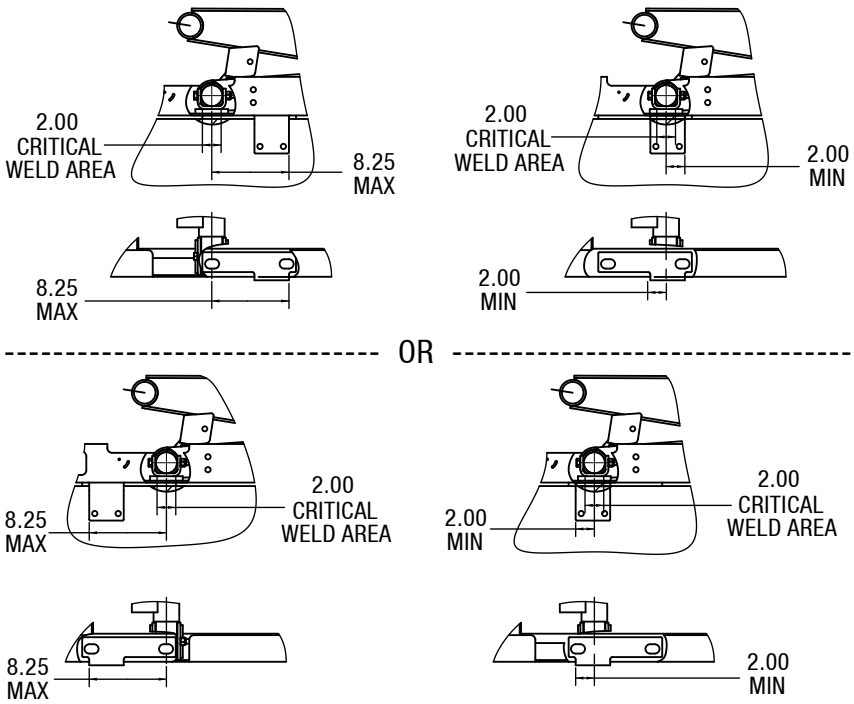

Figure 7: Mounting Angle Location

2. Locate the ideal mounting angle location along the chassis frame while keeping within the guidelines shown in Figure 7. Ensure the weld from the sub-frame to the mounting angle will be positioned directly below the saddle tube.

   NOTE: Optional 10 gauge rivet spacers may be positioned under the mounting angle and the rear hinge angle to clear rivets on the truck frame.

⚠ DANGER

Welding, oxy-fuel cutting, or grinding sparks can cause fuel to ignite which in turn can lead to injury or death. Always take adequate steps to avoid ignition of fuel tanks during equipment installation.

⚠ DANGER

Exhaust system heat can cause hydraulic component failure and may lead to a fire which could cause injury or death. Always install equipment in locations where heat from the exhaust system will not damage any hydraulic components.

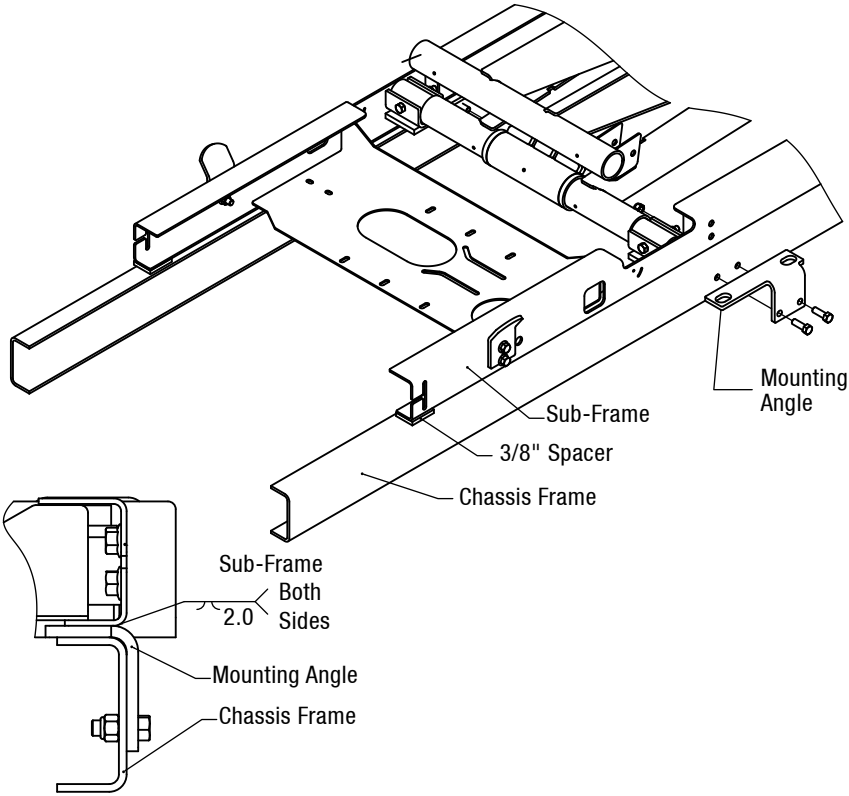

Figure 8: Sub-frame Mounting

3. Secure each mounting angle to the truck frame by drilling two 17/32” diameter holes and bolting the mounting angles to the truck frame using two 1/2” GR5 bolts and nuts (Figure 8).
4. Weld each mounting angle to the sub-frame rail, keeping within the guidelines shown in Figure 8. Do not weld the mounting angles to the chassis frame.

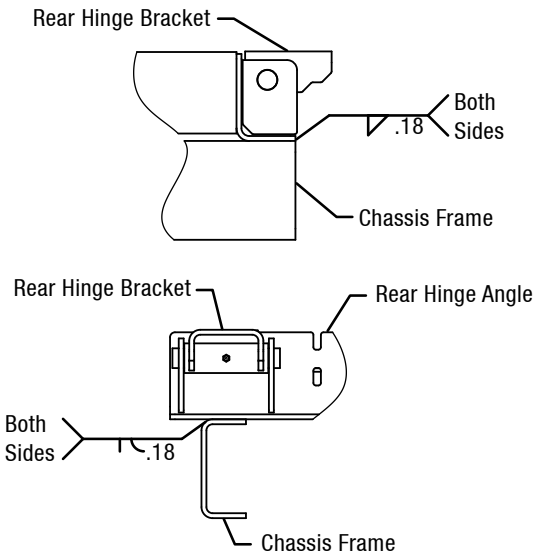

Figure 9: Rear Hinge Installation Location

5. Weld the rear hinge angle to the chassis frame as shown in Figure 9.
6. Cut any excess frame off behind the sub-frame rear hinge.

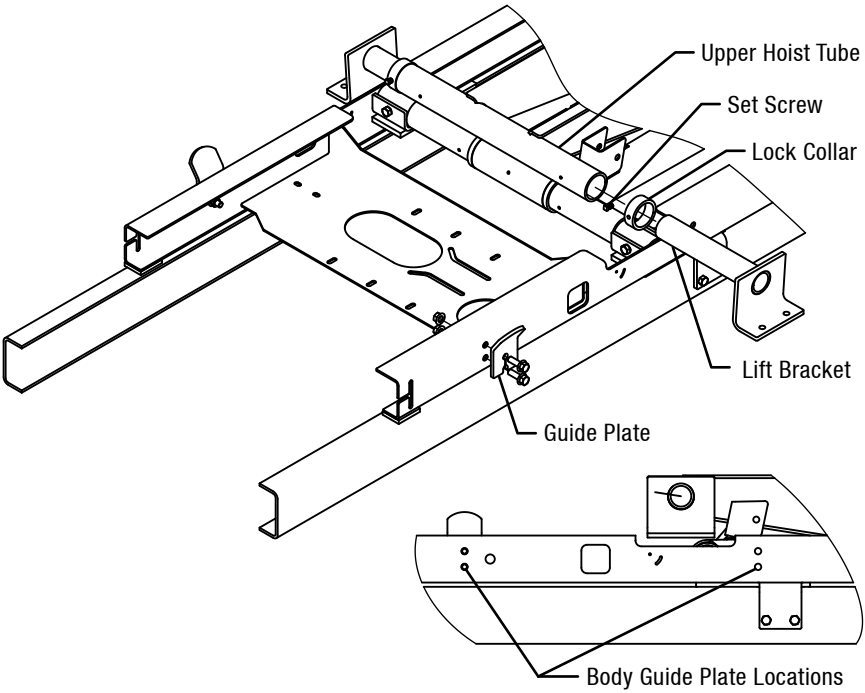

Figure 10: Lift Shaft Installation

7. Slide a lock collar onto each lifting shaft, and then slide the shafts into each end of the upper hoist tube (Figure 10).
8. Install a body guide plate onto each sub-frame rail using a set of bolt holes provided. Fasten guides using the supplied hardware (Figure 10).

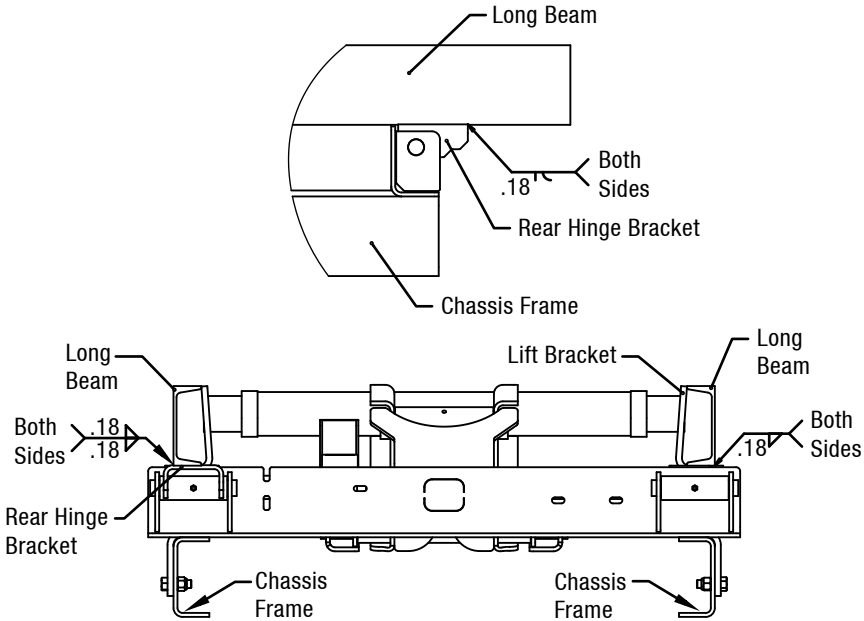

Figure 11: Body to Sub-frame Installation

9. Position the rear hinge brackets against the bottom side of the long beams. Once in position, weld the rear hinge brackets to the body long beams as shown in Figure 11.
10. Slide each lift bracket against the inside of the long beam channel. Then weld the lift bracket to the outside of the long beam (Figure 11).
11. With the lift bracket secured, slide the lock collars against the hoist lifting tube and lock them in place by tightening the 3/8” set screw.

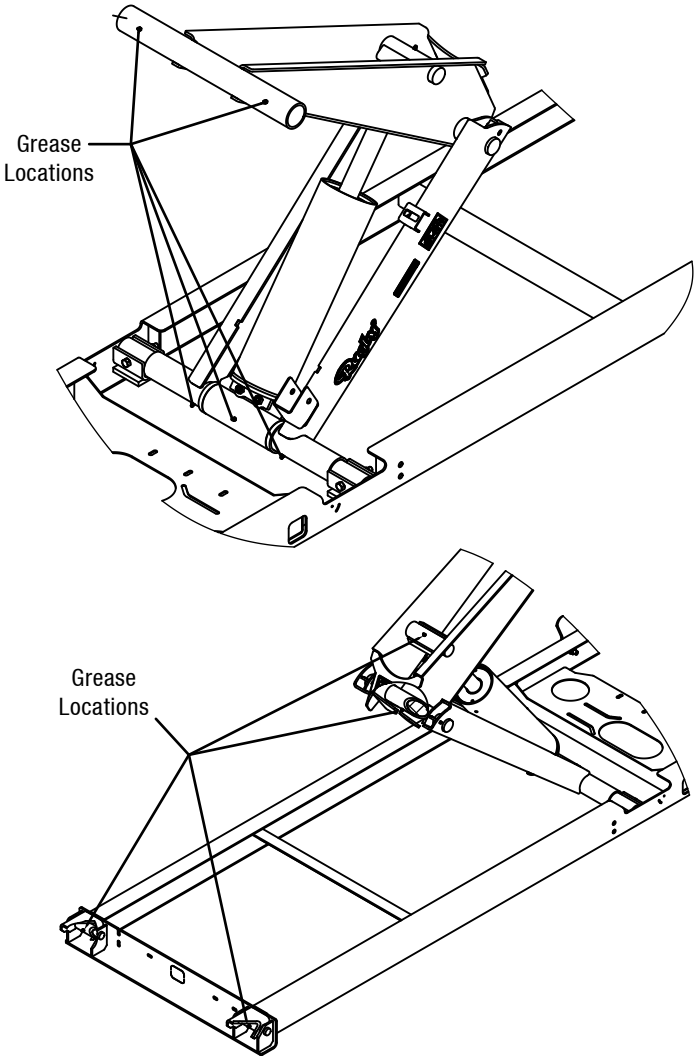

Figure 12: Grease Fitting Locations

12. Install and grease the fittings as shown in Figure 12.

Section 4: Decal Locations

⚠ DANGER

Missing or damaged decals can lead to accidents which may cause serious injury or death. Replace any missing or damaged decals immediately by contacting a Rugby dealer or Rugby Manufacturing Co..

Two Body Prop Operation decals are supplied with each SR-series hoist. These decals must be positioned as shown in Figure 13 on both the left- and right-hand sides of the truck. The chosen decal location should be free of any viewing obstructions.

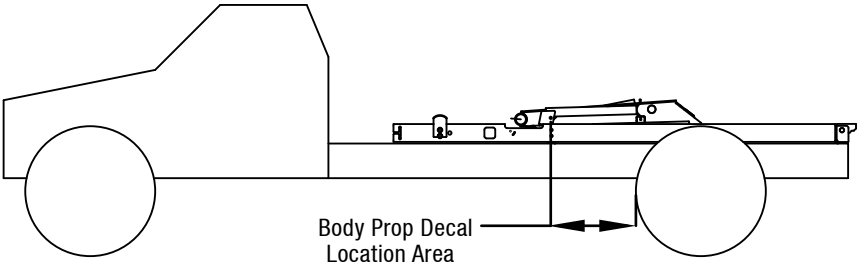

Figure 13: Body Prop Decal Location

Two Danger decals are supplied with each SR-series hoist. These decals must be positioned as shown in Figure 14 on both the left- and right-hand sides of the truck. The chosen decal locations should be free of any viewing obstructions.

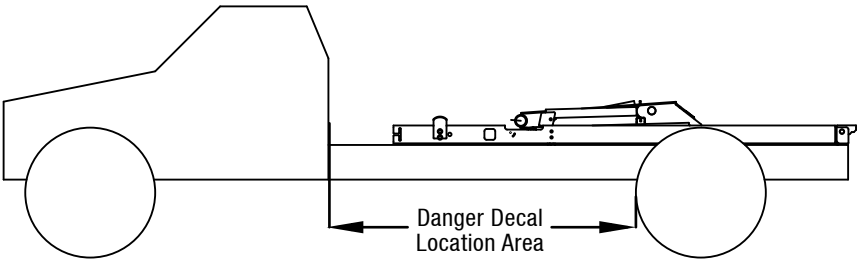

Figure 14: Danger Decal Location

Section 5: Operation

⚠ DANGER

NEVER position yourself or allow others under a raised body as this can result in serious injury or death should the body inadvertently descend. ALWAYS prop up the **unloaded** body using the body props.

Raising the Prop Body

1. Raise the unloaded body to the sufficient height and shut off all power.
2. While positioning yourself as far as possible from underneath the truck, grasp the prop from the latched position.
3. Rotate the prop upwards to the vertical position.
4. Push down until the prop locks into the vertical position.

Lowering the Prop Body

1. Push down until the prop locks into the vertical position.
2. Rotate the prop upwards to the vertical position.
3. While positioning yourself as far as possible from underneath the truck, grasp the prop from the latched position.
4. Lower the unloaded body to the sufficient height and shut off all power.

Section 6: Maintenance

Every 100 cycles or every two months, whichever comes first:

- Grease all hoist and rear hinge grease fittings. Some grease fittings are in hard to find locations. Refer to page 21 for all grease fitting locations.
- Check hardware regularly and re-tighten as needed. Refer to page 11 for torque guidelines.
- Check hydraulic components regularly for any leaks or signs of wear. Replace damaged or leaking components as needed.

Refer to the pump or hydraulic components installation and operation manual for more service information.

Section 7: Exploded Views

4016B Model

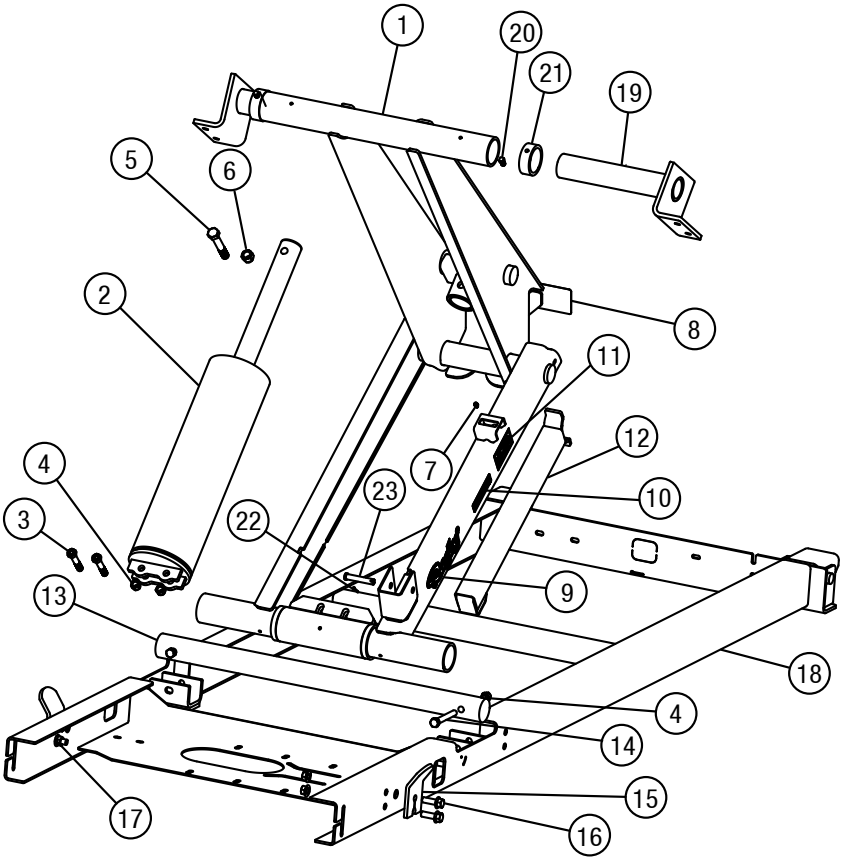

4016B Parts List			
Item	**Part #**	**Description**	**Qty**
1	2192040	Frame, SR-4016 PCBLK Hoist	1
2	1954444	Cylinder, 5.50 X 16 BLK	1
3	1643730	Screw, 1/2-13 X 2-3/4 HHC GR8 PLT	2
4	1642984	Nut, 1/2-13 Nylock - NE GR8 STL	4
5	1653838	Screw, 5/8-11 X 4 HHC GR8 PLT	1
6	1643070	Nut, 5/8-11 Nylock - NE, GR. 5 STL	1
7	1520370	Fitting, 1/4-28 Thread Forming Grease	2
8	1581116	Serial No. Plate, Poly w/Mask	1
9	1313141	Decal, Rugby Logo Medium	1
10	1313146	Decal, Made In USA	1
11	1841516	Decal, SR-4016 Model	1
12	1839407	Prop, Body PCBLK	1
13	1898583	Shaft, Saddle Pivot	1
14	1653835	HHC Screw, 1/2-13 X 4 GR5 PLT	2
15	1831125	Plate, Bolt-On PCBLK Body Guide	2
16	1577459	Bolt, 1/2-13 X 1-1/2 FLG GR5	4
17	1576016	Nut, 1/2-13 Flange GR5 STL PLT	4
18	2192034	Sub-Frame, 09' SR-4016B PCBLK	1
19	2193560	Bracket, SR Lift	2
20	1653845	Set Screw, 3/8-16 X 5/8 SQR HD, BLK	2
21	1656191	Collar, 2.25 Lock	2
22	1653917	Pin, 1/8" X 1" Cotter	2
23	1857937	Pin, 1/2" X 2.75" ZP Clevis	1

SR4020 Model

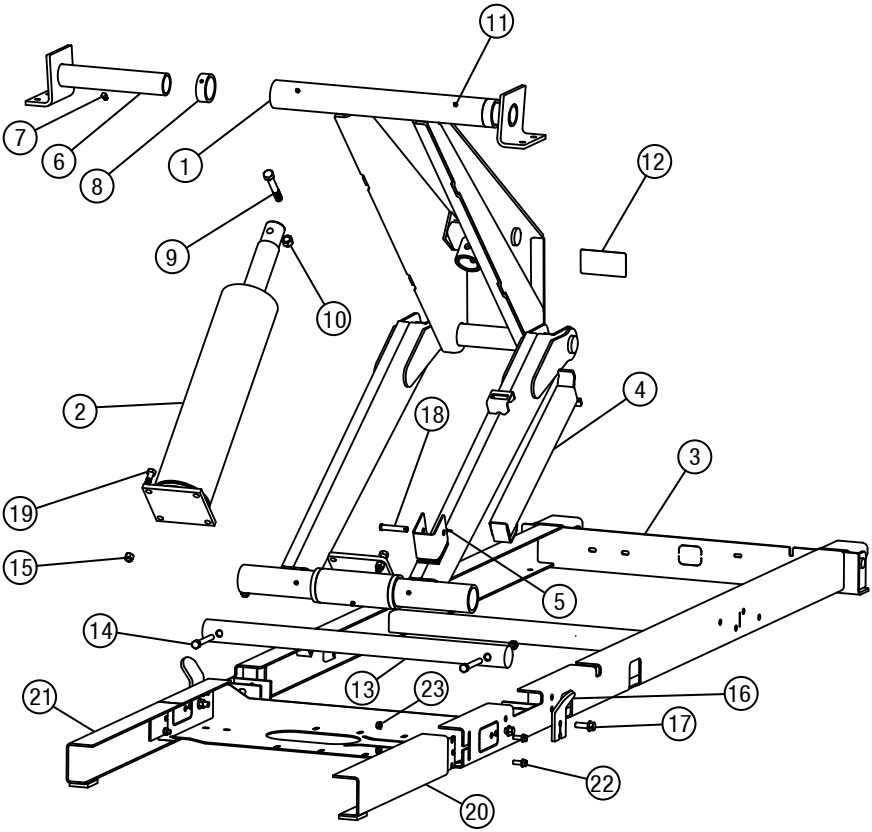

SR4020 Parts List			
Item	**Part #**	**Description**	**Qty**
1	2117068	Frame, SR-4020 PCBLK Hoist	1
2	1315043	Cylinder, 5.5 X 20 HR-550	1
3	2193587	Sub-frame, 09’ SR-4020	1
4	1839407	Prop Body PCBLK	1
5	1653917	Pin, 1/8” x 1” Cotter	1
6	1822289	Bracket, SR Lift	2
7	1653845	Set Screw, 3/8-16 X 5/8 SQR HD, BLK	2
8	1656191	Collar, 2.25 Lock	2
9	1653838	Screw, 5/8-11 x 4 HHC GR8 PLT	1
10	1643070	Nut, 5/8-11 Nylock - NE, GR5 STL	1
11	1520370	Fitting, 1/4-28 Thread Forming Grease	7
12	1581116	Serial No. Plate, Poly w/Mask	1
13	1822332	Shaft, Saddle Pivot	1
14	1653835	HHC Screw, 1/2-13 X 4 GR5 PLT	2
15	1642984	Nut, 1/2-13 Nylock - NE GR8 STL	6
16	1822291	Plate, Sub-frame Body Guide	2
17	1577459	Bolt, 1/2-13 X 1-1/2 FLG GR5	2
18	1857937	Pin, 1/2” x 2.75” ZP Clevis	1
19	1654458	HHC Screw, 1/2-13 UNC-2A X 2, GR8, ZN	4
20	1851734	Extension, 24” L PCBLK Sub-frame	1
21	1851737	Extension, 24” R PCBLK Sub-frame	1
22	1511135	Bolt, 3/8-16 X 1 FLG GR5 PLT	2
23	1540531	Nut, 3/8-16 GR5 ZP Flange	2

SR5020 Model

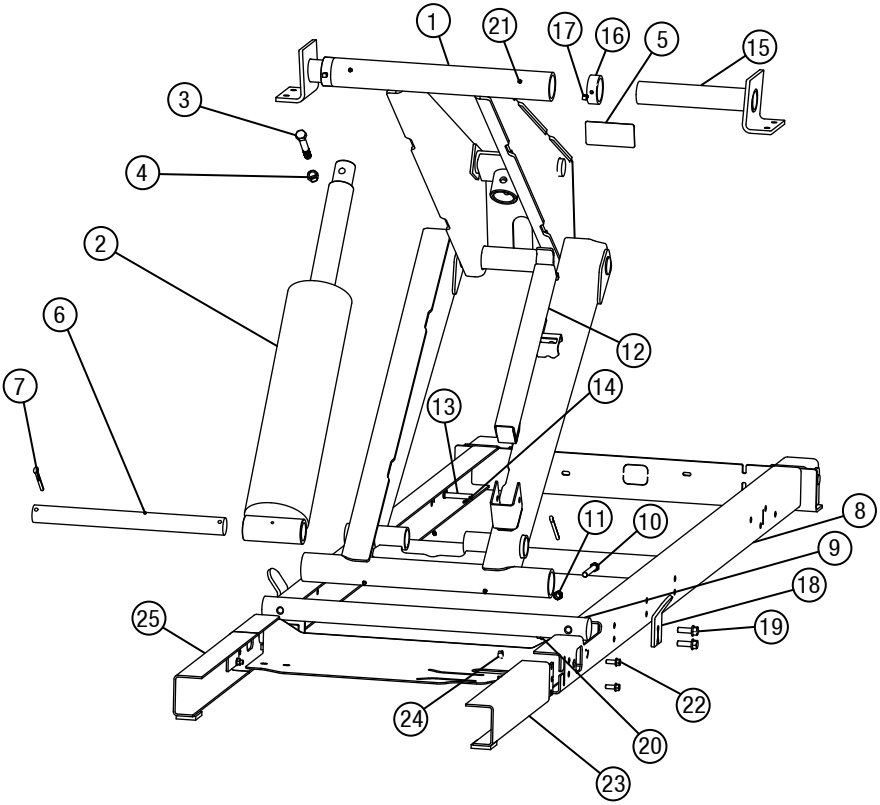

SR5020 Parts List			
Item	**Part #**	**Description**	**Qty**
1	1844062	Frame, SR-5020 PCBLK Hoist	1
2	1621268	Cylinder, 6 X 20, 2.5 Rod, 2.0 Neck	1
3	1653838	Screw, 5/8-11 X 4 HHC GR8 PLT	1
4	1643070	Nut, 5/8-11 Nylock - NE, GR5 STL	1
5	1581116	Serial No Plate, Poly w/ Mask	1
6	1844096	Shaft, 5020 Cylinder Pinning	1
7	1653921	Pin, 5/16” X 3-1/2” ZP Cotter	2
8	1844097	Sub-frame, 09’ SR-5020 PCBLK	1
9	1822332	Shaft, Saddle Pivot	1
10	1653835	HHC Screw, 1/2-13 X 4 GR5 PLT	2
11	1642984	Nut, 1/2-13 Nylock - NE GR8 STL	2
12	1839407	Prop, Body PCBLK	1
13	1857937	Pin, 1/2” X 2.75” ZP Clevis	1
14	1653917	Pin, 1/8” X 1” Cotter	1
15	1822289	Bracket, SR Lift	2
16	1656191	Collar, 2.25 Lock	2
17	1653845	Set Screw, 3/8-16 X 5/8 SQR HD, BLK	2
18	1831125	Plate, Bolt-On PCBLK Body Guide	2
19	1577459	Bolt, 1/2-13 X 1-1/2 FLG GR5	4
20	1576016	Nut, 1/2-13 Flange GR5 STL PLT	4
21	1520370	Fitting, 1/4-28 Thread Forming Grease	7
22	1511135	Bolt, 3/8-16 X 1 FLG GR5 PLT	2
23	1851734	Extension, 24” L PCBLK Sub-frame	1
24	1540531	Nut, 3/8-16 GR5 ZP Flange	2
25	1851737	Extension, 24” R PCBLK Sub-frame	1

If questions exist, call your Rugby representative at 1-800-869-9162 for further information.

Rugby Manufacturing Co.
515 First St NE
Rugby, ND 58368

www.rugbymfg.com

Application Policy
Capacity ratings, features, and specifications vary depending upon the model and type of service. Application approvals must be obtained from Rugby Mfg Co; contact your representative for application approval. We reserve the right to change or modify our product specifications, configurations, or dimensions at any time without notice.

1841488G_02/24